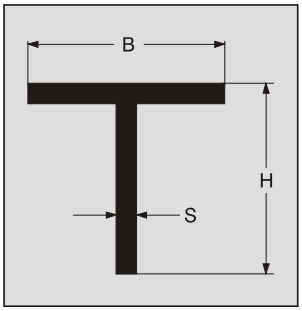

T - Sections
T - Profile
Profiles T

STANDARD PROFILES (2000)

No Profil	Ç		B		S	gr/m
2002	15	X	15	X	1,5	115
2022	15	X	15	X	2,0	151
2003	20	X	20	X	1,5	156
2006	20	X	20	X	2,0	205
2030	20	X	40	X	2,0	313
2004	25	X	25	X	1,5	196
2007	25	X	25	X	2,0	259
2041	25	X	25	X	3,0	381
2046	30	X	20	X	2,0	259
2015	30	X	25	X	2,0	286
2005	30	X	30	X	1,5	237
2008	30	X	30	X	2,0	313
2014	30	X	30	X	3,0	462
2028	30	X	60	X	4,0	929
2027	30	X	100	X	4,0	1361
2012	35	X	15	X	3,0	381
2033	35	X	35	X	3,0	543
2050	35	X	90	X	5,0	1620
2011	40	X	20	X	2,0	313
2038	40	X	40	X	2,0	421
2016	40	X	40	X	3,0	624
2009	40	X	40	X	4,0	821
2037	45	X	80	X	2,0	664
2026	45	X	100	X	2,0	772
2043	45	X	100	X	4,0	1523
2036	45	X	110	X	2,0	826
2017	50	X	35	X	4,0	875
2020	50	X	50	X	3,0	786
2013	50	X	50	X	4,0	1037
2010	50	X	50	X	5,0	1283
2048	50	X	70	X	5,0	1553
2040	50	X	80	X	5,0	1688
2039	50	X	80	X	6,0	2009
2021	50	X	100	X	5,0	1958
2051	50	X	110	X	2,0	853
2031	50	X	120	X	2,0	907
2044	52	×	24	×	4,0	778
2032	55	X	80	X	2,0	718
2035	60	X	30	X	4,0	929
2018	60	X	60	X	4,0	1253

STANDARD PROFILES (2000)

No Profil	Ç		B		S	gr/m
2023	60	X	60	X	6,0	1847
2024	60	X	100	X	5,0	2093
2049	70	X	50	X	5,0	1553
2034	80	X	80	X	6,0	2495
2042	80	x	80	x	8,0	3283
2019	100	X	50	X	3,0	1191
2029	100	X	60	X	5,0	2093
2025	100	X	100	X	10,0	5130
2047	100	X	100	X	3,5	1857